THIS DRAWING IS UNPUBLISHED. RELEASED FOR PUBLICATION - ,- .
© COPYRIGHT - BY TYCO ELECTRONICS CORPORATION. ALL RIGHTS RESERVED.

| LOC | DIST |
|---|---|
| AD | 00 |

REVISIONS

| P | LTR | DESCRIPTION | DATE | DWN | APVD |
|---|---|---|---|---|---|
| | E | EC 0G3C 0216 05 | 26DEC05 | BSV | JLG |

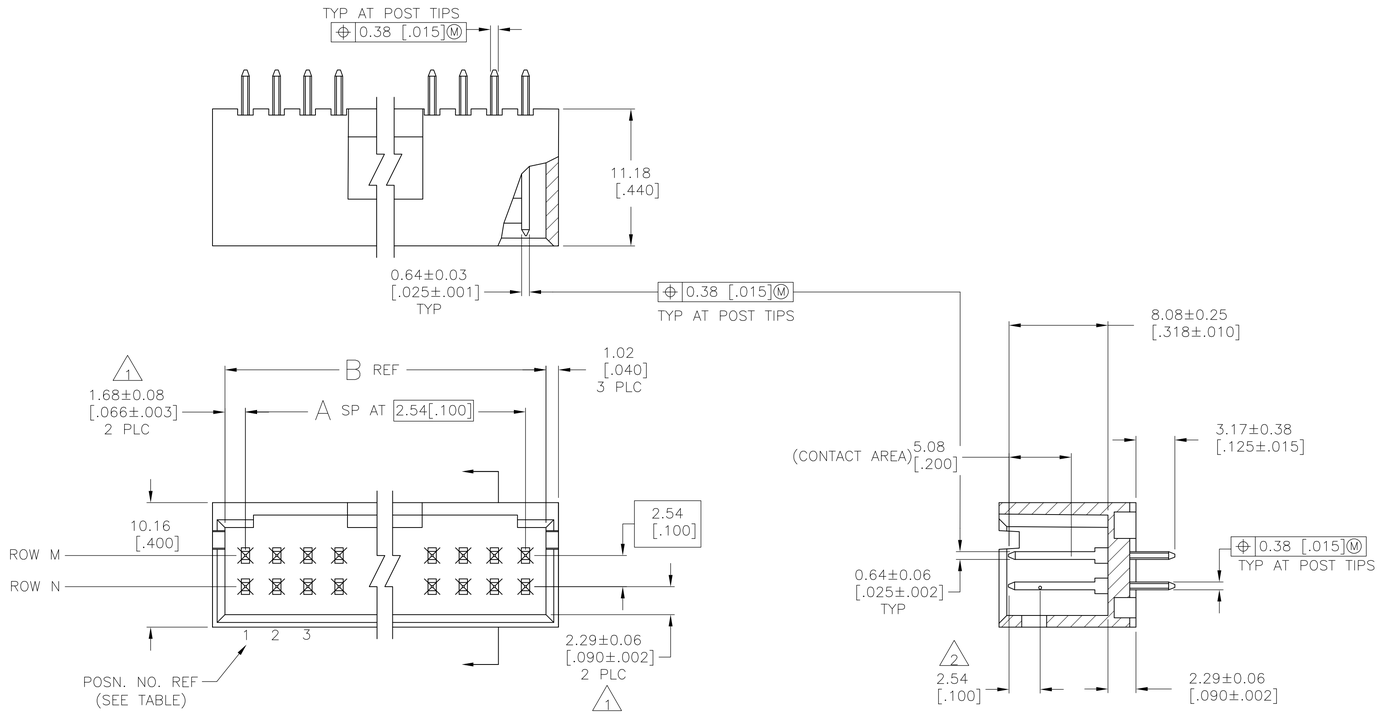


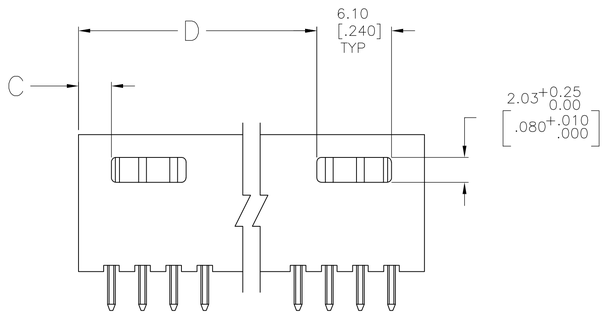


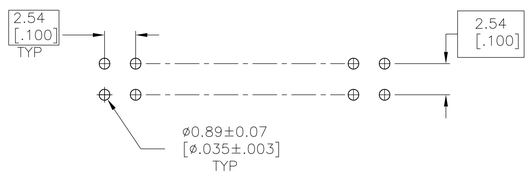


RECOMMONDED POLE LAYOUT

1. THE NOTED DIMENSIONS APPLY AT THE INTERSECTION OF THE POST AND HOUSING.
2. POINT OF MEASUREMENT FOR PLATING THICKNESS
3. HOUSING: FLAME RETARDANT THERMOPLASTIC, COLOR–BLACK. POST: PHOS BRONZE.
4. POST: 0.000381 [.000015] GOLD IN CONTACT AREA, 0.00254–0.00508 [.000100–.000200] MATTE TIN–LEAD ON SOLDER TAIL, ALL OVER 0.00127 [.000050] NICKEL.
5. PRELIMINARY PART NUMBER–NOT RELEASED TO MANUFACTURE.
6. POST: 0.000381 [.000015] GOLD IN CONTACT AREA, 0.00254–0.00508 [.000100–.000200] MATTE TIN ON SOLDER TAIL, ALL OVER 0.00127 [.000050] NICKEL.

| PLATING | ROW N | ROW M | D | C | B | A | NO OF POSN | ASSEMBLY PART NUMBER |
|---|---|---|---|---|---|---|---|---|
| | POSTS REMOVED | | | | | | | |
| 6 | – | 3 | – – | 5.23 [.206] | 13.51 [.532] | 4 | 10 | 5–147077–4 |
| 6 | – | 5 | – – | 5.23 [.206] | 16.05 [.632] | 5 | 12 | 5–147077–3 |
| 6 | – | 5 | – – | 5.23 [.206] | 13.51 [.532] | 4 | 10 | 5–147077–2 |
| 6 | – | 3 | – – | 7.77 [.306] | 18.59 [.732] | 6 | 14 | 5–147077–1 |
| 4 | 3,4 | 3,4 | 33.17 [1.306] | 2.69 [.106] | 38.91 [1.532] | 14 | 30 | 5 147077–5 |
| 4 | – | 3 | – – | 5.23 [.206] | 13.51 [.532] | 4 | 10 | 147077–4 |
| 4 | – | 5 | – – | 5.23 [.206] | 16.05 [.632] | 5 | 12 | 147077–3 |
| 4 | – | 5 | – – | 5.23 [.206] | 13.51 [.532] | 4 | 10 | 147077–2 |
| 4 | – | 3 | – – | 7.77 [.306] | 18.59 [.732] | 6 | 14 | 147077–1 |

THIS DRAWING IS A CONTROLLED DOCUMENT.

DIMENSIONS: mm [INCHES]

TOLERANCES UNLESS OTHERWISE SPECIFIED:
0 PLC ± –
1 PLC ± –
2 PLC ± –
3 PLC ± 0.13[.005]
4 PLC ± –
ANGLES ± –

MATERIAL 3

FINISH SEE TABLE

DWN B. HAYMAKER 14SEP98
CHK J. GESFORD 14SEP98
APVD J. GESFORD 14SEP98

PRODUCT SPEC —
APPLICATION SPEC —
WEIGHT —

Tyco Electronics
Tyco Electronics Corporation
Harrisburg, Pa 17105–3608

NAME HDR ASSY, MOD II, SHROUDED, 4 SIDES, DBL ROW, VERTICAL, .100X.100 .025 SQ POST, SELECT LOAD

| SIZE | CAGE CODE | DRAWING NO | RESTRICTED TO |
|---|---|---|---|
| A1 | 00779 | C-147077 | — |

CUSTOMER DRAWING

| SCALE | SHEET | REV |
|---|---|---|
| 4:1 | 1 OF 1 | E |